1272 *Pianoalto*

zanotta:

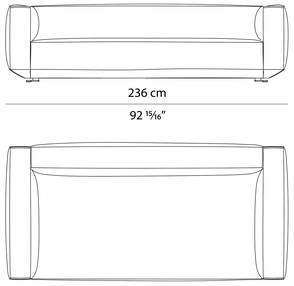

302

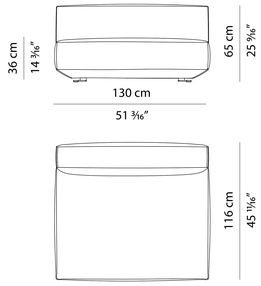

200

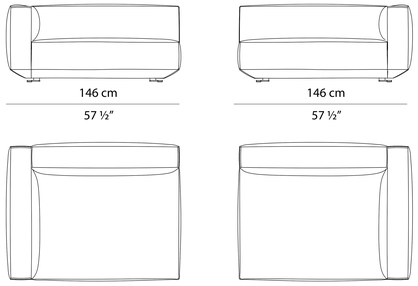

201

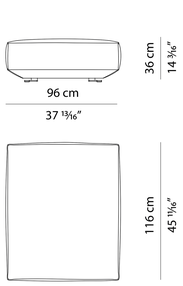

PUF

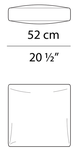

1272/52C

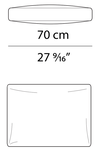

1272/70C

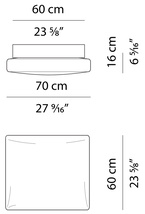

1272/70CR

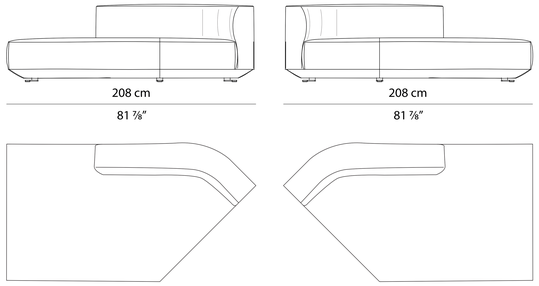

245P

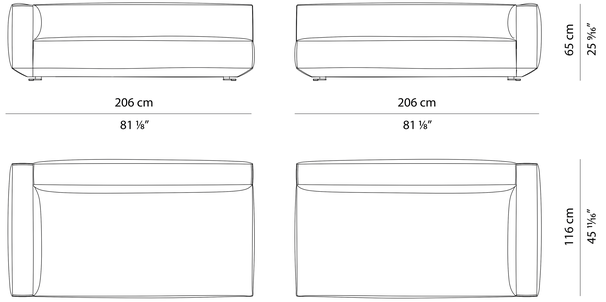

301

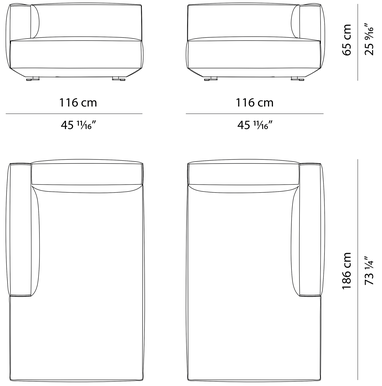

AL1 S/D

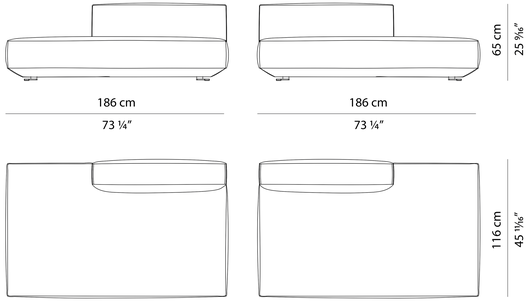

300P

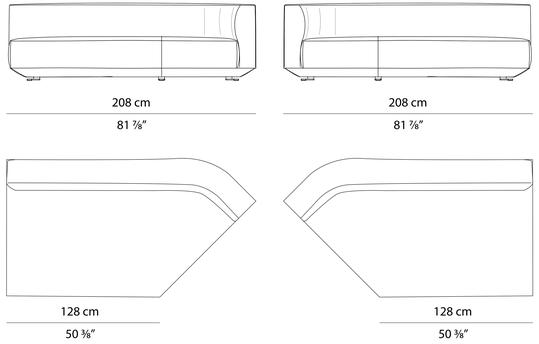

245

Scala 1:10